ADG230 Process Signal Isolator

- Suitable for use in SIL1, SIL2 and SIL3 rated Safety Instrumented System (SIS) Loop applications (EN 61508-2)
- Non-Smart / Non-uProcessor based, Type A instrument
- Ultra Compact Design - 10mm along the length of the rail. (69mm depth from the rail)
- 6 Year Warranty
- Suitable for TS32 G-Rail and TS35 Top-Hat DIN Rail Mounting

Technical Specification

Input	**Impedance**
4-20mA (Passive port)	50Ω
1-5V	500KΩ

Output Options	**Drive**
4-20mA (Active port as std)	Max load 450Ω
1-5Vdc	Min load 200KΩ

(4-20mA Passive/Sink port option available, max 28Vdc external)

Supply

24Vdc ±10% (Red LED Power ***ON*** indicator)

Performance

Isolation:	1000V RMS Input/Output/Supply
Linearity:	<±0.05% of full scale
Accuracy:	<±0.1% of full scale
Input O/C response:	Downscale drive
Response Time:	<200mS (0-100% span step change)

(High speed response ≤25mS option 'HS' available)

Low Power Consumption:	0.75Watts

Environmental Conditions

Operating Ambient: -5 to +55˚C
Relative Humidity: 5 to 95% RH (Non-Condensing)
EMC: 2014/30/EU , EN 61326-1:2013 (Controlled EM)
RoHS: 2011/65/EU

WIRING

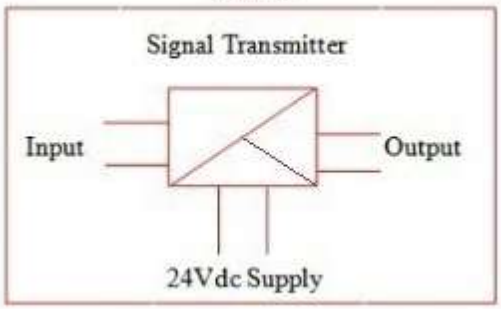

Enclosure Dimensions
10w x 88.5h x 69d mm

Weight: 34g

(Dummy unit enclosures available if planning for future expansion)

Tel: 01908-567003 Email: sales@amelec-uk.com Visit: www.amelec-uk.com Fax: 01908-566735

AMELEC Instruments, Cochran Close, Crownhill, Milton Keynes, MK8 0AJ

Issue 7d. 09.22