AGS1119-PL Two out of Three Trip Amplifier

- Suitable for SIL 1, 2 & 3 safety loop applications
- Suitable for any Process inputs
- Supply Voltages 10 to 35Vdc
  115 / 230Vac +/- 20%
- Conforms to CE requirements
- Amelec Standard 10 year warranty

Input
Any process Voltage or Curent Input
Typical input: 4 - 20mA
Input O/C drive up for high trips & down for low trips

Outputs
Common Trip output is a 2 x changeover (Relay 1)
Alarm output is a 1 x changeover (Relay 2)
Contacts, rated at 110Vac, 1A, 100VA (resistive)

Performance

Trip settability :-	±0.2%
Trip repeatability:-	±0.1%
Response time:-	<200mS

Environmental Conditions

Storage temperature: -40 to 70°C
Operating ambient: -15 to 55°C
Relative humidity: 5-95 % RH

Isolation

1000VDC
Input(S)/Contacts/Supply/Earth

Dimension

152W x 137D x 81H

Trip Function

Set points set by fifteen turn blindset potentiometer, each channel independently adjustable over the full input range.

Three green LED's, one for each input, identified as ALARM 1,2 & 3. LED's to extinguish on alarm to show which input has caused the alarm and Relay 2 to de-energise.

One RED LED indentified as TRIP to extinguish on any two or more inputs going into alarm and latch into trip Relay 1 to de-energise on TRIP (Fail safe) giving two changeover contacts

Trip can be reset by volt free contact closure on TB16 & 17.

Wiring

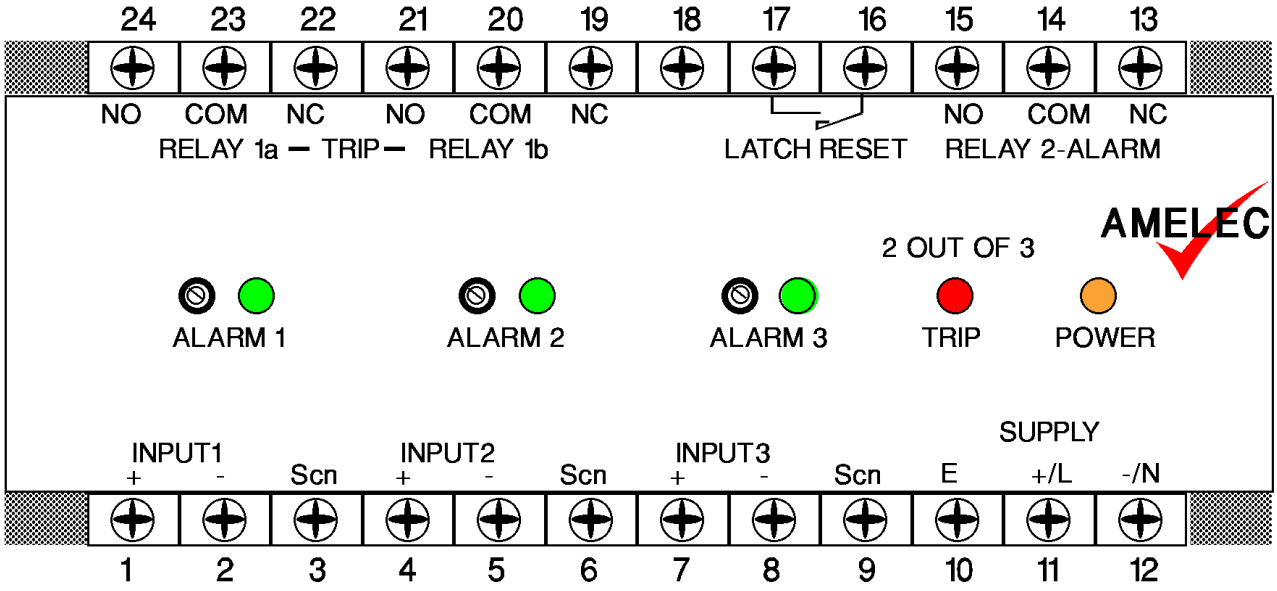

sales@amelec-uk.com www.amelec-uk.com Tel: 00 44 (0)1908 567003

Issue 5.2014