AMELEC
SIGNAL CONDITIONING

APM489-LD-4-P Large Display Process Meter

- 4 Digit Red LED High-brightness display.
- Suitable for a combination of Process Inputs
- 4" High Digits for up to 50metre viewing.
- Supply Voltage 95-265Vac (12V / 24Vdc option available)
- Wall Mounting (Front Panel Mount option available)
- Day Light viewing LED Display option available for Outdoor Applications

Technical Specifications

Input

Current Input	Input Resistance	Voltage Input	Input Resistance
0-10mA 0-20mA 4-20mA	33 Ω	0-5V 1-5V 0-10V	1 MΩ

Display

A 4 Digit Red LED High-brightness display with 102mm (4") high characters.
(Green, Yellow and White digit colours available on request)

The display can be calibrated as either 0 to 100.0% or in engineering units to suit applications.

Display scaled at factory prior to shipment, although can be re-scaled using front panel pushbuttons if required.

Accuracy: < 0.1% of range

Environmental Conditions

Storage: -20 to +70℃
Operating: -5 to +50℃
Sealing: All round IP65, with bottom cable glands.

(Internal Heater option available to allow operating down to -25℃ if required for outdoor applications)

Front of Panel Mounting Option Details

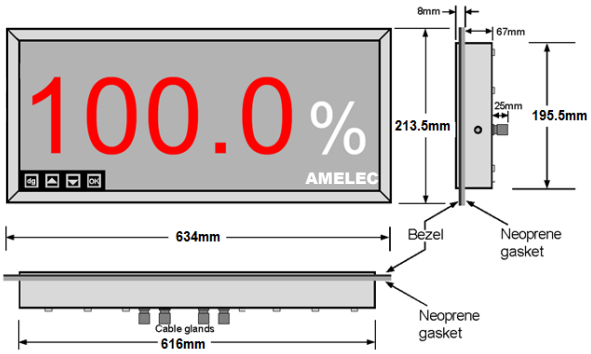

Detail showing bracket hardware fitting sequence

Panel cutout dimensions

198.5mm (h) x 619mm (w)

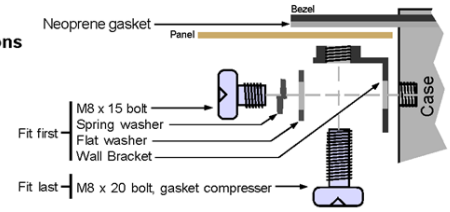

Dimensions

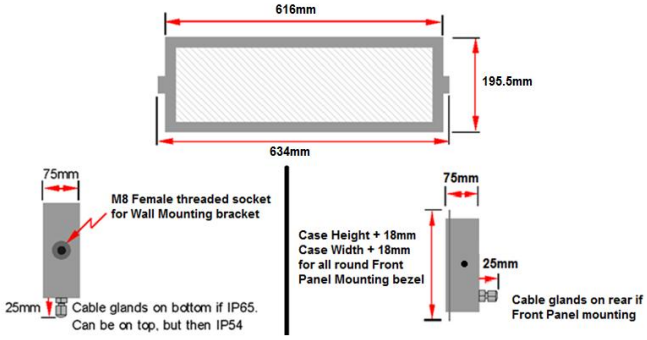

Wall Mounting Details

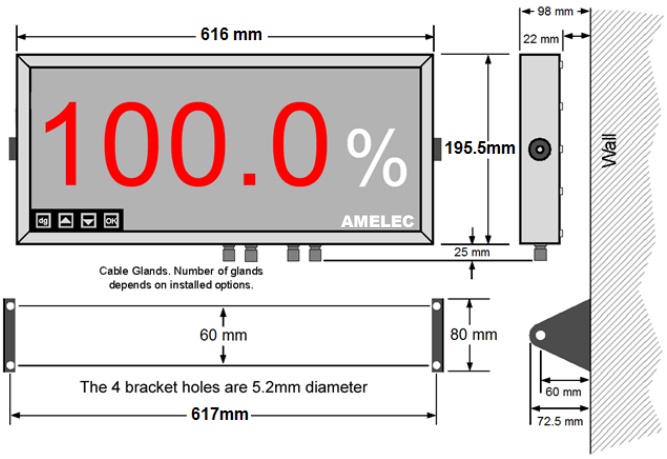

Detail showing bracket hardware fitting sequence

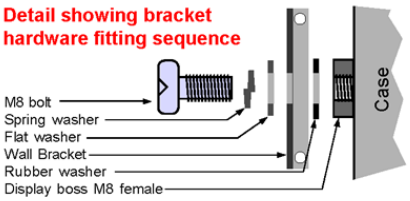

The side holes in the two brackets are 8.5mm dia. to accept M8 bolts.

Wiring Diagram

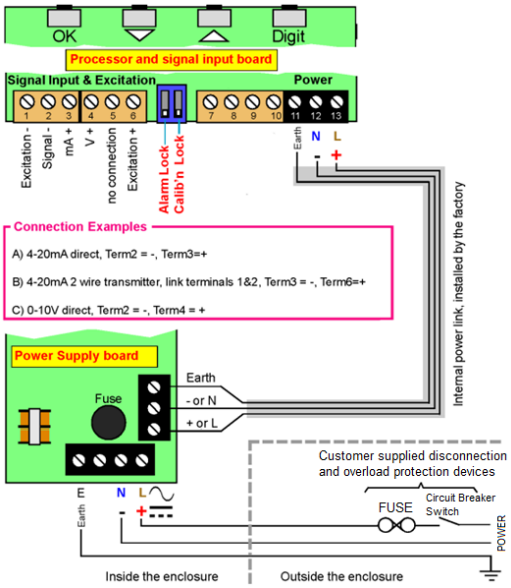

Tel: 01908-567003 Email: sales@amelec-uk.com Visit: www.amelec-uk.com Fax: 01908-566735

AMELEC Instruments, Cochran Close, Crownhill, Milton Keynes, MK8 0AJ

Issue 1.2015